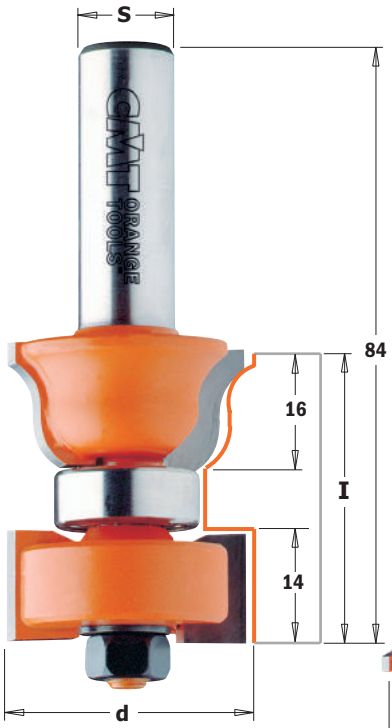

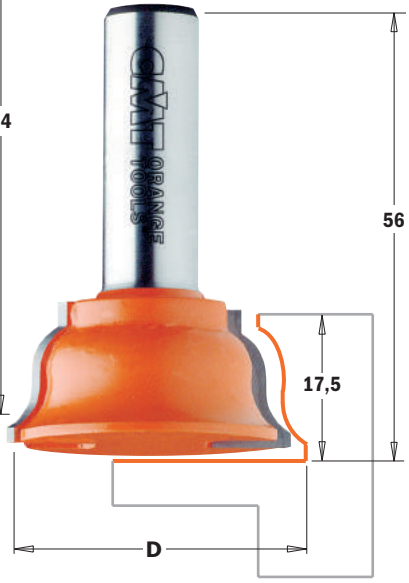

8/955.801

HW Z2 RH

CMT designed this set so you can create window sashes that are as beautiful as they are functional. As an additional feature, the CMT window sash set will also mill perfectly matched 35mm rail and stile parts for custom made doors. Like all CMT quality bits, this set includes our anti-kickback design feature and our trademark non-stick orange coating. Made of Fatigue Proof® steel with carbide-faced cutting edges for longer life. Each set contains one 38mm bit and one 35mm bit designed for cutting 35mm stock.

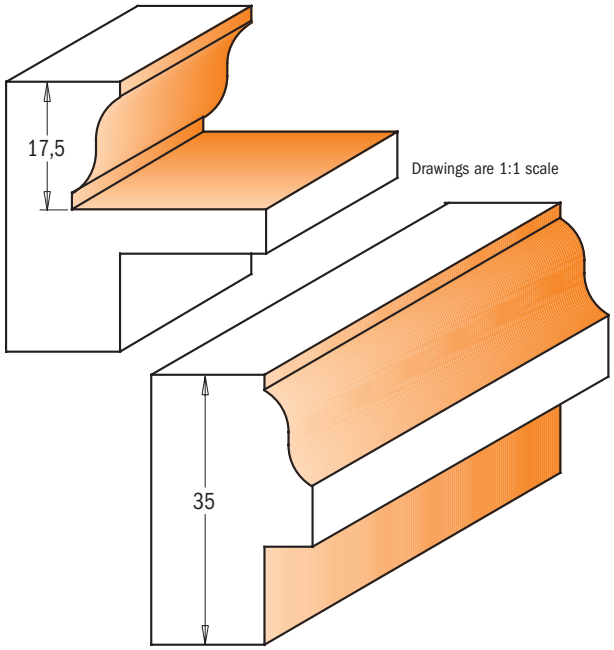

d mm	l mm	L mm		D mm	l mm	L mm	Pack Qty.	ORDER NO. S=Ø12mm	ORDER NO. S=Ø12,7mm	Spare parts			
35	35	84		38	17,5	56	5	**955.801.11**	**855.801.11**	791.012.00	822.004.11	541.518.00	990.020.00

Step-By-Step Window Sash Construction

CMT set makes it easy!

In our step-by-step example for window sash construction, we used the following:
- CMT Window Sash Set (item #855.801.11)
- stiles cut 35mm thick
- rails cut 35mm thick
- scrap stock

The CMT Window Sash Set was designed ideally for the construction of windows in 35mm stock, however variations as narrow as 28mm can be used. Stock thicker than 35mm exceeds the milling range of the cutter. Remember to adjust your measurements and cutting depths according to the wood thickness you use. We suggest making a trial joint in scrap stock according to the following steps before milling all of the cope and stick profiles.

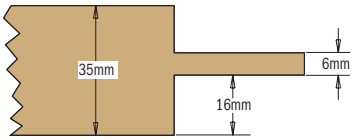

STEP 1 - Measurements and making the tenons
The ideal thickness of the stiles when using the CMT sash set is 35mm. The desired width of the stiles will determine the length you need to make your tenons, while the length of the stile will represent the desired full height of the sash. When cutting the rails to length, make sure to add the length of the two tenons to the overall length of the rail. The length of the tenons should be at least half the width of the stile. Mill 16mm measuring from the front face of the stock using a table saw, radial saw or router as shown in illustration 1. This measurement remains invariable since it is calculated to the height of the CMT sash routers. The width of the tenon is 6mm. Rotate the stock and mill the other side. As per our example, the second milling will be 13mm but this measurement will vary if you are using thinner stock.

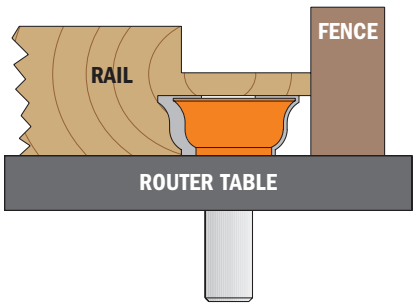

STEP 2 - Making the cope profile on rails, sash bar and muntins
To make the cope profile, place the rail face front down on the router table with the tenon flush to the bit as shown in illustration 2. Adjust the fence so the bit mills 6,35mm deeper than the tenon. To mill the sash bar and the muntins (cross bars), position front face down on the router table and mill without changing the height of the bit.

STEP 3 - Making the stick profile on rails, stile, sash bar and muntins
To mill the stick profile along the inside edges of all sash parts, place the already milled cope profile front face down on the router table and adjust the sash bit so that the lower edge of the top cutter will exactly touch the upper edge of the tenon as shown in need to 3 illustrations. With the rail still face down on the table, turn it so the inside edge of the rail is touching the bit and mill the stick profile. Mill the inside edges of the stiles and mill both edges of the front face of the sash bar and muntins.
To cut the slots for the tenons, measure 16mm from the front face of the stiles and rout with a table saw.